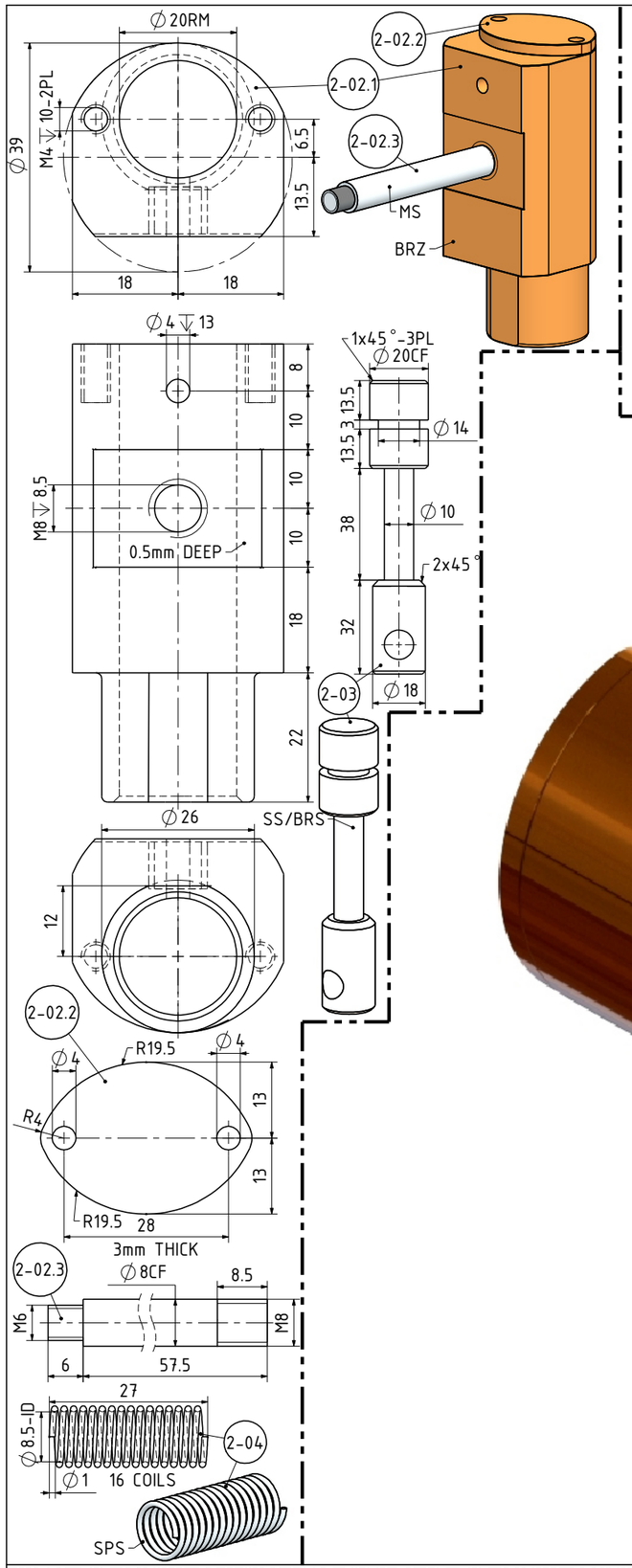

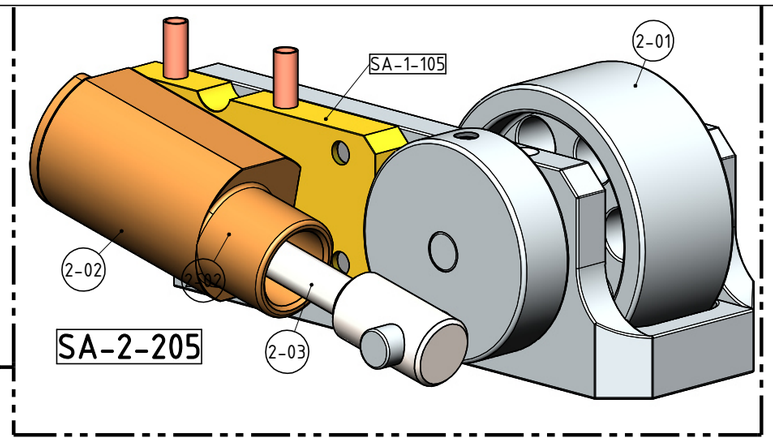

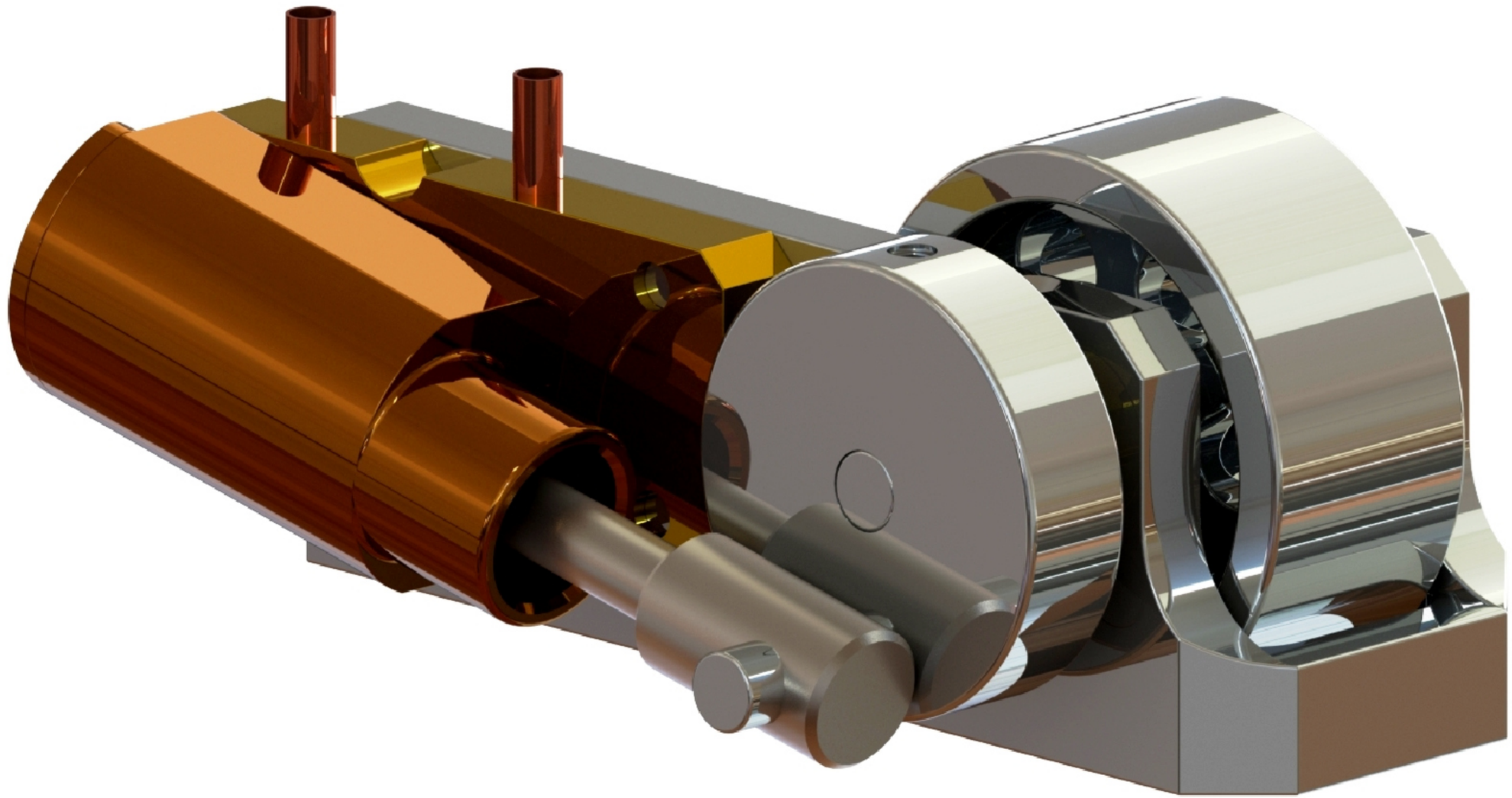

NOTES: THE ORIGINAL DRAWINGS WERE GIVEN TO ME. THE ORIGNAL DESIGN/BUILD WAS BY J.P.DUVAL OF "MINIATURES MECANIQUES MODELS". DRAWING No: MV o 10x20 02 00, DATED OCTOBER 2004. THE ENGINE SHOWN ON THESE DRAWINGS IS 2x THE ORIGINAL

TITLE A STURDY 1 CYLINDER OSCILLATING STEAM ENGINE (B=20 S=40)	DRAWING CONTENTS PARTS AND ASSEMBLIES	PROJECTION	MODEL SCALE: 1:1
		JDWDS	DWG SCALE: 1:1 @A3 OR AS SHOWN
		DATE MAY 2020	Copyright © J.A.M. DE WAAL PAPAKURA NZ
		SHEET: 02 OF 02 A3	No: 09A-29-00-SHT02

PROJECT No 09A-29-00
JDW DRAUGHTING SERVICES
J.A.M. DE WAAL. 12 BRIGHTWELL STREET PAPAKURA 2110. NEW ZEALAND. PHONE: 0064 09 2988815. MOB: 0211791000 E-MAIL: dewaal@xtra.co.nz.

DRAWINGS ARE FOR PERSONAL USE ONLY NOT FOR COMMERCIAL PURPOSES